INTERNATIONAL JOURNAL FOR INNOVATIVE RESEARCH IN MULTIDISCIPLINARY FIELD ISSN: 2455-0620 Volume - 5, Issue - 8, Aug – 2019
Monthly, Peer-Reviewed, Refereed, Indexed Journal with IC Value: 86.87 Impact Factor: 6.497
Received Date: 30/07/2019 Acceptance Date: 10/08/2019 Publication Date: 31/08/2019

FABRICATION OF AUTOMATIC FORKLIFT DESIGN FOR ROBOTIC VEHICLE

[1]Ei Ei Wai, [2]Mon Mon Aye

[1] Ei Ei Wai, University of Technology (Yatanarpon Cyber City), Pyin Oo Lwin, Myanmar
[2] Mon Mon aye, University of Technology (Yatanarpon Cyber City), Pyin Oo Lwin, Myanmar
Email - [1]eieiwai.mech@gmail.com , [2]monmonaye.mech@gmail.com

Abstract: *Robotic vehicles, are widely used to transport the materials for storage automation in industry and commerce. Forklifts also play an essential role in retail outlets, warehouses and other business in operation, shuttling inventory while helping employees stay productive, efficient, and organized. This paper deals with the fabrication of automatic forklift design for the robotic vehicle that can store and pick up object to/from specified storage slots. The main focus of this study is to developed the forklift design for an intelligent AGV-based material-handling system by using a model based systems engineering approach. In this study, the automatic forklift system for the robotic vehicle is designed to perform its tasks such as lifting workpiece and transporting for the desired stations. It does not use vehicle routing path but make a decision to move, detect, avoid the obstacles and lift the work pieces itself. When the work pieces are needed to be transported from one station to another, the required station will call the vehicle to perform this task. The main aim of this forklift system is to load and unload for the desired work piece at the stations and while the vehicle is moving, it can able to avoid obstacle in its way. PIC 16F877A is used for automatic forklift system. After arriving at the target station, the vehicle will perform its tasks with forklift system and then transports the parts to next signal defined station. After that, it will go back to the parking system. It is designed to move materials without the involvement of a human being. They must be capable of knowing when to slow down or stop to prevent a collision. Vehicle transfers completed pallet(s) to shipping dock and can load/unload for the work piece (200mm x 126mm x 100mm).*

Key Words: *Robotic Vehicle, Automatic Forklift system, Material Handling, Stability, Station.*

1. INTRODUCTION:

In modern industry, innovation by automating processes provides with competitive advantages in speed, efficiency, and production value. The material flow within the product manufacturing site is expensive; therefore, the efforts to find favorable and flexible systems continue to be of great importance. The demand toward a higher level of autonomy is strong and will change the operation of warehouses significantly. Automatic guided vehicles (AGVs) are used to transport materials or accomplish specific tasks in many different industrial settings. AGV concepts were combined with forklift to build systems that enjoy both powerful material handling and simple autonomy. Material handling system are widely used in several flexible manufacturing system installations and directly affects on the performance of the whole system. The process of loading, unloading and transport of materials is one of the key issues for every production site and has a great impact on product cost. Forklifts were invented for loading and unloading of heavy workpieces in the industries. The use of forklift with the right attachment of mobile robot system would be the best way to make the whole process in manufacturing less time consuming and less intensive. The main advantages of this technology are or seem to be that there is a low cost of ownership and it has the ability to lift heavy payloads that humans cannot feasibly accomplish. In this system, rather than using fixed paths, it was designed to search the obstacles free path so that it can be changed relatively easy when new stations or flows are added. The main aim of this research is to reduce the presence of hazardous working environments and the high cost of human labor in working areas. For loading, unloading, moving or generally transporting any type of materials (raw materials, work in process, and finished good) within and out of manufacturing cells such as warehouses, machines and assembly lines. As the technology improves, there will be new ways to use robots which will bring new hopes and new potentials.

2. PROBLEM STATEMENTS:

Robots in automation technology plays a vital role in today's manufacturing system. Automated robots are needed in the hazardous places. Future development of obstacles avoidance Robot is very big to explore. By using this simple collision avoidance system a lot of new and variety mobile robot with multiple functions can be invented. The procedure of designing an AGV is a complicated process. These issues are not only hardware but also software issues. Software is not just constants in inputs but it is variable and outputs must be chosen to specify the design. Furthermore, these issues interact with each other so that each cannot be considered separately but all must be considered simultaneously. The longer-term goal is to automate all operations moving material from trailer to production line and back in automotive stamping and assembly plants. These kinds of operations include picking up and setting down loads

at a number of sites in the facility. These sites include semi-trailers, tug AGVs which cooperate with the forked AGVs, automated storage and retrieval systems, and staging areas near the production line. The design of lift machine should be creative, simple, user friendly and use minimum cost especially the material cost.

3. METHODOLOGY:

The system consists of the mobile base of the forklift and the vertical moving mechanism that contains metal forks as shown in Figure:1. The base has three wheels, two front wheels, and one rear wheel. The front wheels are driven by DC motors with reduction gear box. The differential drive is controlled to drive and steer the base. The concept of the forklift is to have a lifting mechanism attached with two metal forks to leave the cargo. The dimensions of the forklift were made to work in indoor environment and hence the dimensions were selected to pass through normal doors.

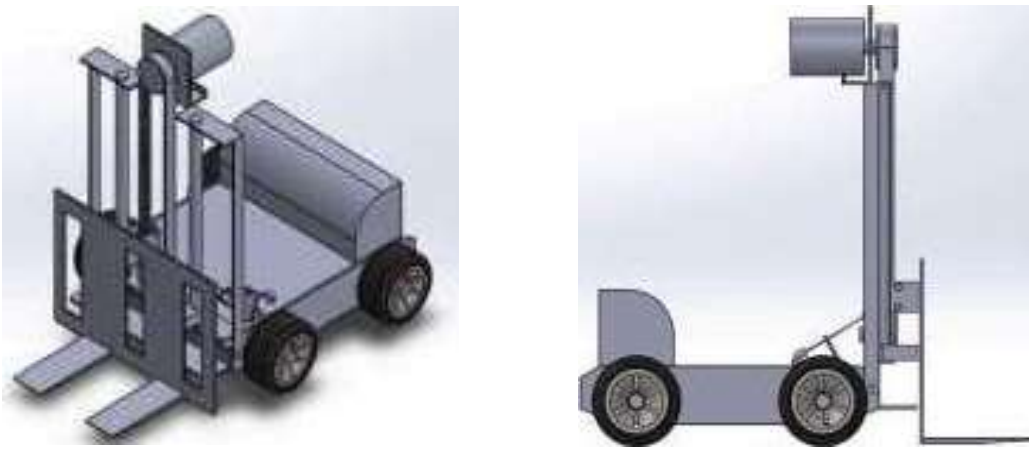

Figure: 1 Modelling of Robotic Vehicle with Automatic Forklift System

4. MAIN COMPONENTS USED IN IMPLEMENTATION

- Forklift
- RF transmitter & receiver
- IR sensor, LDR
- Ultrasonic sensors
- Arduino mega 2560
- PIC 16F877A
- L298 motor driver and motors
- Timing pulley and belt

5. OPERATION OF THE SYSTEM:

The vehicle will exactly know the station from RF signals and either IR sensor or LDR. The three stations will emit RF signals with different time, same frequency. Firstly, the vehicle will get command to go to the station A or B or C via push button or switch. And then, the vehicle will go to the defined station. To lift work pieces from the substation line, the vehicle must stop in front of the station at exact point. So, IR transmitter and receiver are used to solve this problem. Then, the vehicle will go to the station according to the signals defined. If the sensor finds the obstacles in front of the robot, the robot will slowly drive during (20 in) before the obstacles and will stop at 15 in. Then check the first right sensor clear or not. If first right sensor is clear, the sensor will turn right. If first right sensor not clear, it will check next right second sensor. If obstacles clear, robot will turn right. If both right sensors not clear, it will check first left sensor clear or not. If first left sensor clear, it will turn left. If first left sensor not clear, it will check next left sensor. If obstacles clear, it will turn left. If both left sensors and right sensors not clear, it will move backward. Then, start check again obstacles. After avoiding obstacles, it will search the desired path.

When the vehicle arrived at the calling station, it will detect to lift the desired workpiece which has specified shape and dimension. In this system, the desired workpiece has dimensions of 180mm in length, 140mm in width and 100mm in height. These dimensions of workpiece are specified with the design of the vehicle's dimensions. To lift the workpiece, the forklift of the vehicle system has loading and unloading system. While going to the station and moving around the path, the forklift system of the vehicle will be at the unloading position to prevent the forks touching with the ground while moving and for the sensing system of the vehicle. When the vehicle detects the desired workpiece at the station, it will unload the forks to lift the workpiece at first. Then, it will load the desired workpiece after detecting. After then, it will backward along with the black line and will wait other signal to transport the lifted workpiece to the desired station.

6. CONFIGURATION OF THE FORKLIFT SYSTEM FOR ROBOTIC VEHICLE:

Desired mass to lift, m = 1.5kg
Force(Weight) on the fork, W = 14.715 N
Force on each beam = 7.36 N
Max:bending moment, M = 1028.19N/mm^2
Beam width = 25.4 mm
Beam thickness, t_b = 1.5mm
Safety factor, SF = 2 (for stainless steel)
Yield stress, σ_y = 450 N/mm^2
Allowable stress, σ_{all} = 112.5N/mm^2
Moment of inertia, I = 7.14 mm^4

7. DESIGN CONSIDERATION FOR THE STABILITY OF ROBOTIC VEHICLE:

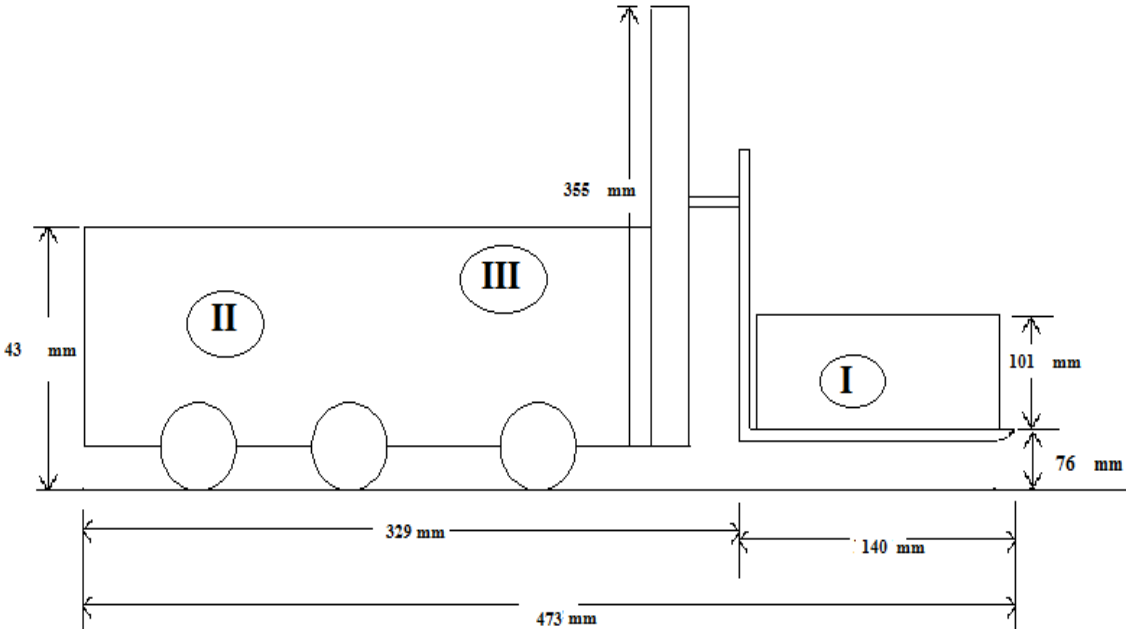

Figure:2 Parameters of the Robotic Vehicle

$X_{CG} = \frac{\Sigma Wx}{\Sigma W}$, $Y_{CG} = \frac{\Sigma Wy}{\Sigma W}$

Weight of load = mg = 1.5 x 9.81= 14.715 N
Weight of car = 3x 9.81 = 29.43 N
Combined weight = weight of load + weight of car = 14.715 + 29.43 = 44.145 N
For I, x_1 = 70 mm, y_1 = 88.5 mm
For II, x_2 = 164.5 mm, y_2 = 21.5 mm
For III, x_3 = 236.5 mm, y_3 = 21.5 mm

$\therefore \mathbf{X_{CG}} = \frac{\Sigma Wx}{\Sigma W} = 184.75$ mm and $\therefore \mathbf{Y_{CG}} = \frac{\Sigma Wy}{\Sigma W} = 32.66$mm

Calculation Of Vehicle's CG after Inclining the Fork

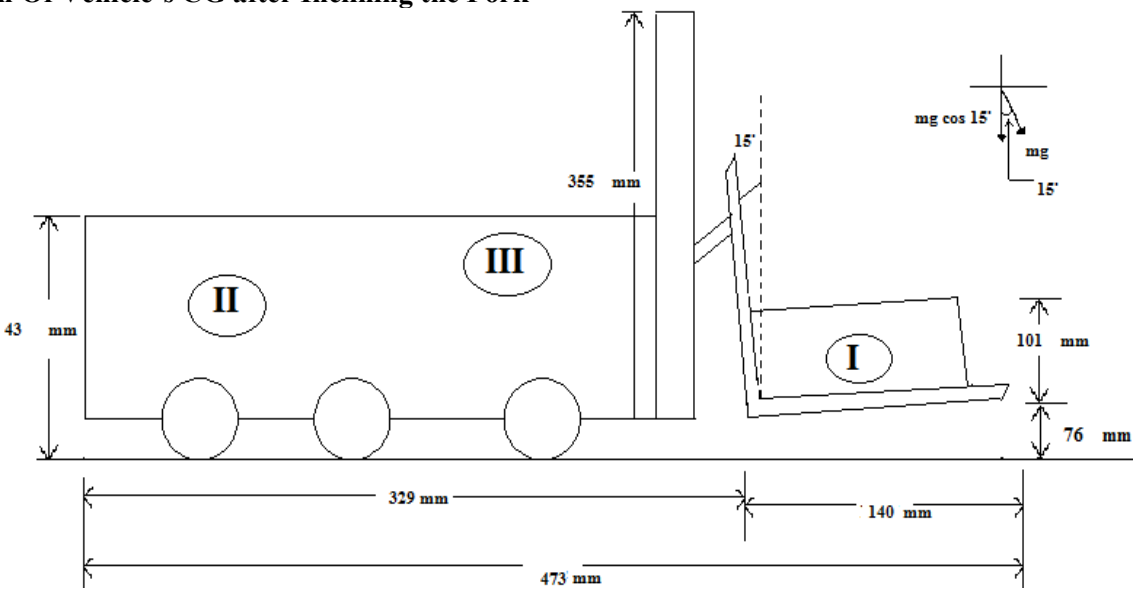

Figure:3 Center of Gravity in the Robotic Vehicle

Weight of load = mg cos(15) = 1.5 x 9.81x cos (15) = 14 N
Weight of car = 3x 9.81 = 29.43 N
Combined weight = weight of load + weight of car = 14. + 29.43 = 44.145 N
For I, x_1 = 70 mm, y_1 = 88.5 mm
For II, x_2 = 164.5 mm, y_2 = 21.5 mm
For III, x_3 = 236.5 mm, y_3 = 21.5 mm

$\therefore \mathbf{X_{CG}} = \frac{\Sigma Wx}{\Sigma W} = 184.75$ mm and $\therefore \mathbf{Y_{CG}} = \frac{\Sigma Wy}{\Sigma W} = 32.66$mm

FABRICATION OF AUTOMATIC FORKLIFT DESIGN FOR ROBOTIC VEHICLE

(a) Fabrication of Vehicle Frame and Forklift Mast (Hardware)

(b). Combination of Hardware & Software for Robotic Vehicle

Figure: 4 Fabrication of Automatic Forklift Design for Robotic Vehicle

PERFORMANCE TEST & DISCUSSION

(a). Vehicle Coming to the Station and Stops at the Black Line, then going to the Substation Line

(b). Vehicle arriving at substation and lifting the workpiece with forklift

(c). Vehicle going back after lifting workpiece, searching next station and pick at desired position

Figure: 5 Performance Test for the Automatic Forklift Design of Robotic Vehicle

According to the performance task results, to improve the system more efficiently, magneto-sensors and GPS system, laser sensors can also be used instead of IR sensors. By using IR sensors below the forks and black line sensing system, the vehicle was able to lift the workpiece easily. The use of forklifts with the right attachments would be the best way to load and unload, which would make the whole process less time consuming and less labor intensive. If the system is installed properly, it will reduce the presence of hazardous working environments and the high cost of human labor in working areas and the system can be used for loading, unloading, moving or generally transporting any type of materials (raw materials, work in process, and finished good) within and out of manufacturing cells such as warehouses, machines and assembly lines, transporting raw material to the factory floor, reposition objects inside the factory, or place finished products back to storage system quickly.

From the performance testing of the system, the vehicle can go to the desired station and can perform forklift system via sensing the black line following system and can load, unload workpiece. So, the desired system is successfully implemented and completed. The results are successful and expected outcome is accomplished. This research will reduce product and facility damage because of installed sensors and software provide accurate vehicle navigation and obstacle detection. It will reduce high labor cost in hazardous places, improve flexibility and faster cycle time.

8. CONCLUSION:

The main focus of this study is to make a robotic vehicle (AGV) with simple and applicable routing system and more importantly reducing the cost and increasing the flexibility. The system is improved by employing sensors which make the plan more intelligent dealing with multi directional paths. If one of the stations called the vehicle, the vehicle will go straight forward only to the station according to signals defined. While going to the station, the sensors will check the way which will not have obstacles. Motors will turn left or right till the sensors will not found obstacles and then it will go straight forward to the station emitting signals. After arriving at the desired target, the vehicle will perform its tasks with forklift system and it will wait one minute at that station to receive signals either may be to go to another station or may be to perform another tasks. If vehicle does not receive signals or commands until one minute, it will go back to the parking system. The system will always perform in this way when the signals are received. This system does not use vehicle routing and path planning. It searches its calling station, moves obstacles free path, detects and avoids obstacles, lift the workpiece by its intelligence. If one of the stations called the vehicle, the vehicle will go straight forward only to the station according to signals defined. While going to the station, the sensors will check the obstacles which can encounter in its path. If the obstacles are encountered in its path, it will avoid them. Motors will turn left or right till the sensors will not found obstacles and it will go straight forward to the station emitting signals. After arriving at the desired target, the vehicle will perform its tasks with forklift system and it will transport to other desired stations. After then, the vehicle will go back to the parking system. From the simulation results, the desired system is successfully performed.

9. ACKNOWLEDMENT:

The author would like to express special thanks to the members of this research for their continuous encouragement and support.

REFERENCES

1. Dr. Mahmoud A. Mostafa, “Mechanics Of Machinery”, (2013)
2. An Intelligent mobile robot navigation Technique using RFID Technology, vol 57, No.7, (2008 September)
3. Yuru Shao, “Design and analysis of new flexible and safe forklift”, M. Engg. Thesis, Vol.91, 2014
4. P. Naveenkumar, “Design and Analysis of Two Wheel Drive Forklift for Industrial Warehouses”, 2014

5. RS Khurmi, J.K Gupta, A Text book of Machine Design", 2005
6. Ilir Doci, Dynamic Analysis of Forklift during Load Lifting using Modeling and Simulations, vol.3, 2013
7. Mohamed Abdellatif, "Design of an Autonomous Forklift Using Kinect", MATEC Web of Conferences, 2018
8. K. Bijanrostami, "Design and development of an automated guided vehicle for Educational Purposes", M. Eng. thesis Eastern Meditterranean University, Sep. 2011.
9. https://www.Engineering ToolBox.com